ANSER

X1 Lite

Built for Simplicity and Cost-Efficiency





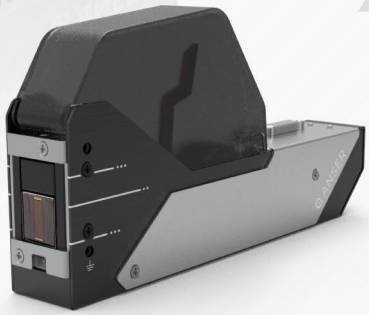

4X the Capacity, Lower the Cost

ANSER X1 Lite supports multiple printhead options: the standard printhead prints at 0.5" or 1", while the latest XL 1" Bulk Ink Cartridge printhead delivers up to 4X ink volume. That means fewer changeovers, lower cost per print, and a more efficient production line.

Easy Operation

7" touchscreen with intuitive UI design simplifies message editing and daily production tasks for any operator, with no specialized training required.

Production Efficiency

Xonnect-ready for centralized management, providing real time monitoring that helps prevent downtime, so your line runs with less oversight and lower unexpected costs.

X1 Lite

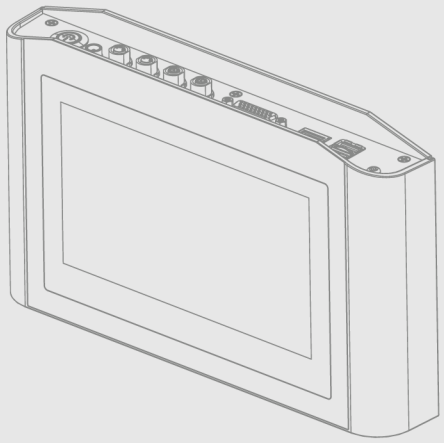

Display	7" LCD Touchscreen
I/O Ports	USB 2.0 x 2
	RJ-45 x 1
	RS-485 & RS-232 x 1
	M8-6：for Light Tower
	M8-4：NPN Encoder x 1
	M8-4：NPN Sensor x 1
Printhead Number	1
Printhead Port	DB26 x 1
Support Printhead Model	T2 Standard, T2XL
Print height (Single)	12.7mm & 25.4mm
Power Input	AC 100V~240V, 50/60Hz (60 Watt)
Fonts	Support True Type Fonts
System Languages	Arabic, Bulgarian, Serbian, Czech, German, English, Spanish, French, Korean, Italian, Hungarian, Dutch, Japanese, Polish, Portuguese, Russian, Romanian, Slovak, Swedish, Vietnamese, Thai, Turkish, Chinese Traditional, and Chinese Simplified
Printing Functions	Static Data：Text, Logo, Shape
	Dynamic Data： Shift, Counter, Production Date, Expiration Date, Varirable
	Barcode type： EAN8, EAN13, EAN14, EAN128, UPCA, UPCE, CODE39, CODE128, ITF14 (SCC-14), NVE18 (SSCC-18),INTER25, CODABAR, PDF417, DATAMATRIX, QRCODE, GS1 (DATAMATRIX, DATABAR EXP, DATABAR, QRCODE), D'MATRIX 8x32, DUN14
Operating Temp.	0~50°C (32°F~122°F)
Operating RH.	0%~90%, Non-condensing
Dimensions (L x W x H) & Weight	246 x 150.2x 40 mm (9.59 x 5.91 x 1.57 in)
	1.52kg (3.35 lbs)
Communication Protocol	TCP IP/UDP, Modbus TCP
Software Support	ANSER Xonnect & Loftware Nicelabel

T2 Standard

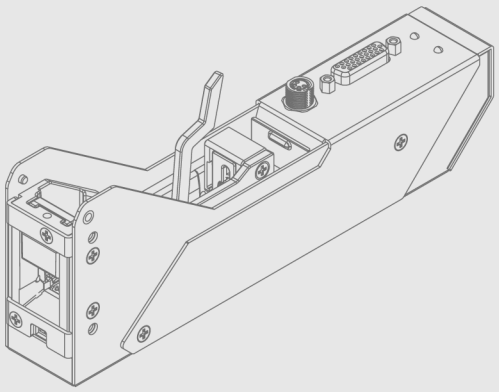

Print Height	12.7mm or 25.4mm
Printing Resolution	600 x 600 DPI
Printing Speed	Up to 300m/min
Printing Distance	6mm
Controller Port	DB26
I/O Port	M8-4：NPN Encoder or Sensor
Dimensions (L x W x H)	213.5 x 37.8 x 78.5 mm (8.41 x 1.49 x 3.09 in)
Weight	390g (0.86 lbs)
Printhead Cable	Standard：2m
	Optional : 5m, 10m

T2 XL

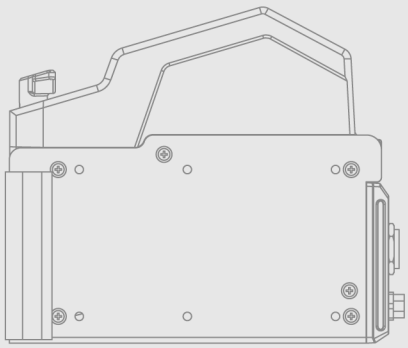

Print Height	25.4mm
Printing Resolution	300 x 600 DPI
Printing Speed	Up to 300m/min
Printing Distance	6mm
Controller Port	DB26
I/O Port	M8-4：NPN Encoder or Sensor
Dimensions (L x W x H)	171.2 x 56.2 x 144.2 mm (6.74 x 2.21 x 5.68 in)
Weight	615g (1.36 lbs)
Printhead Cable	Standard：2m
	Optional : 5m, 10m